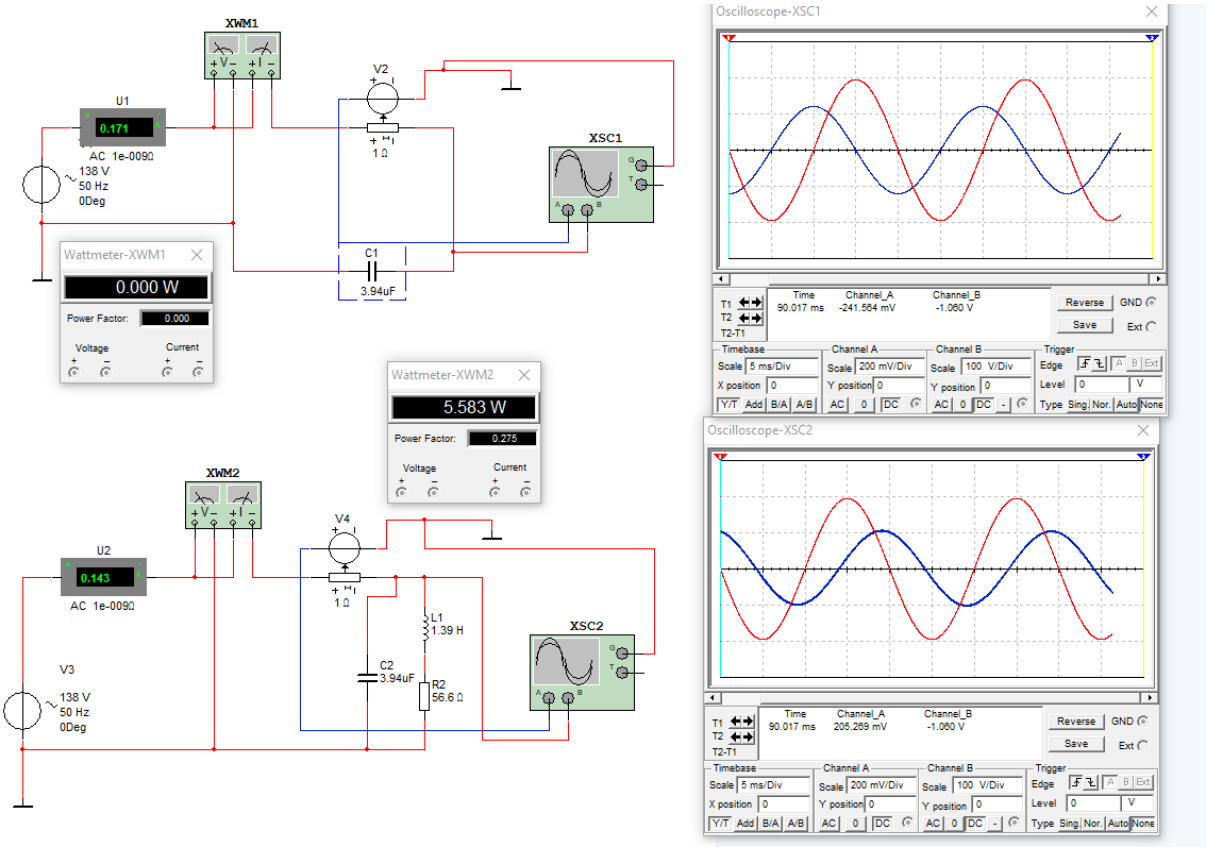
XWM1
U1
0.171
AC 1e-009Ω
138 V
50 Hz
0Deg
V2
1 Ω
XSC1
C1
3.94uF
Wattmeter-XWM1
0.000 W
Power Factor: 0.000
Voltage
Current
Wattmeter-XWM2
5.583 W
Power Factor: 0.275
XWM2
U2
0.143
AC 1e-009Ω
V4
1 Ω
L1
1.39 H
C2
3.94uF
R2
56.6 Ω
XSC2
V3
138 V
50 Hz
0Deg
Oscilloscope-XSC1
Time
90.017 ms
Channel_A
-241.564 mV
Channel_B
-1.060 V
Oscilloscope-XSC2
Time
90.017 ms
Channel_A
205.269 mV
Channel_B
-1.060 V

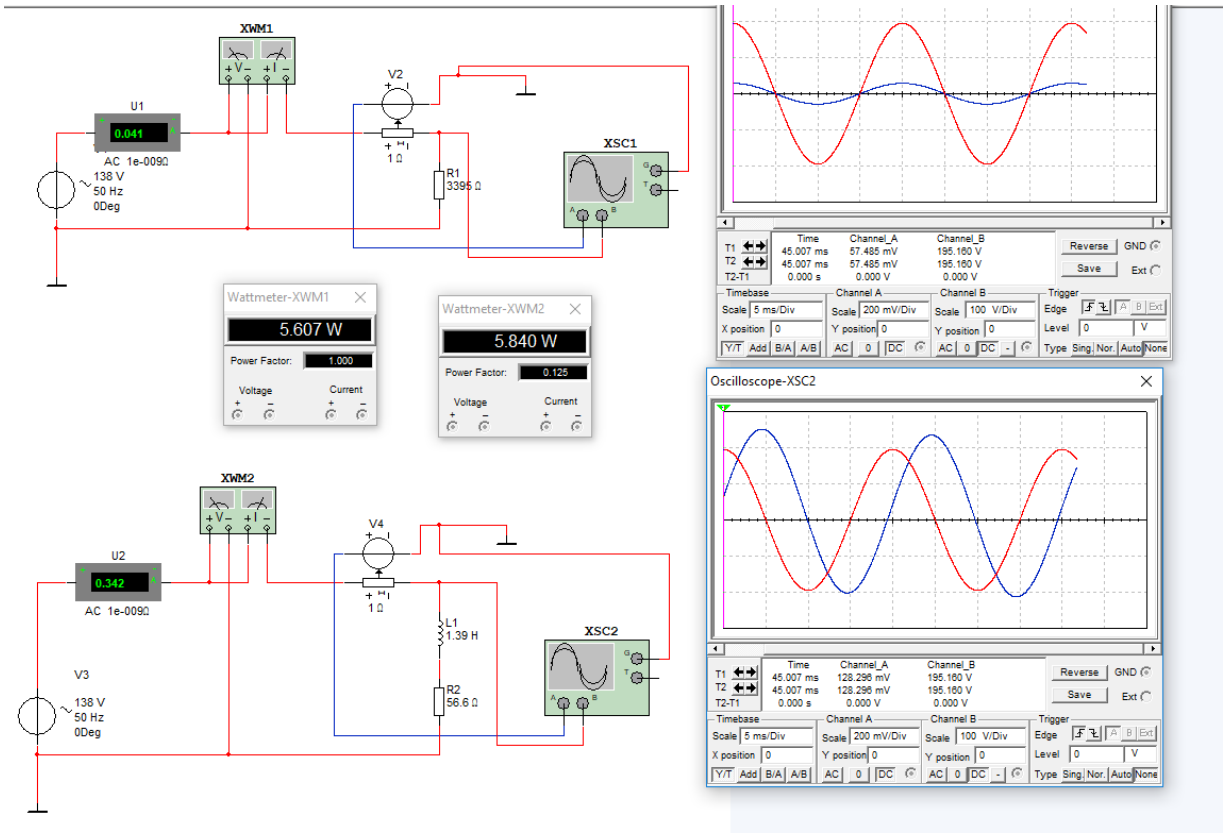
XWM1
U1
0.041
AC 1e-009Ω
138 V
50 Hz
0Deg
V2
1 Ω
R1
3396 Ω
XSC1
Wattmeter-XWM1
5.607 W
Power Factor: 1.000
Voltage
Current
Wattmeter-XWM2
5.840 W
Power Factor: 0.125
XWM2
U2
0.342
AC 1e-009Ω
V4
1 Ω
L1
1.39 H
R2
56.6 Ω
XSC2
V3
138 V
50 Hz
0Deg
Time
45.007 ms
Channel_A
57.485 mV
Channel_B
195.160 V
Oscilloscope-XSC2
Time
45.007 ms
Channel_A
128.296 mV
Channel_B
195.160 V